Ref No,1-66-2021-APR

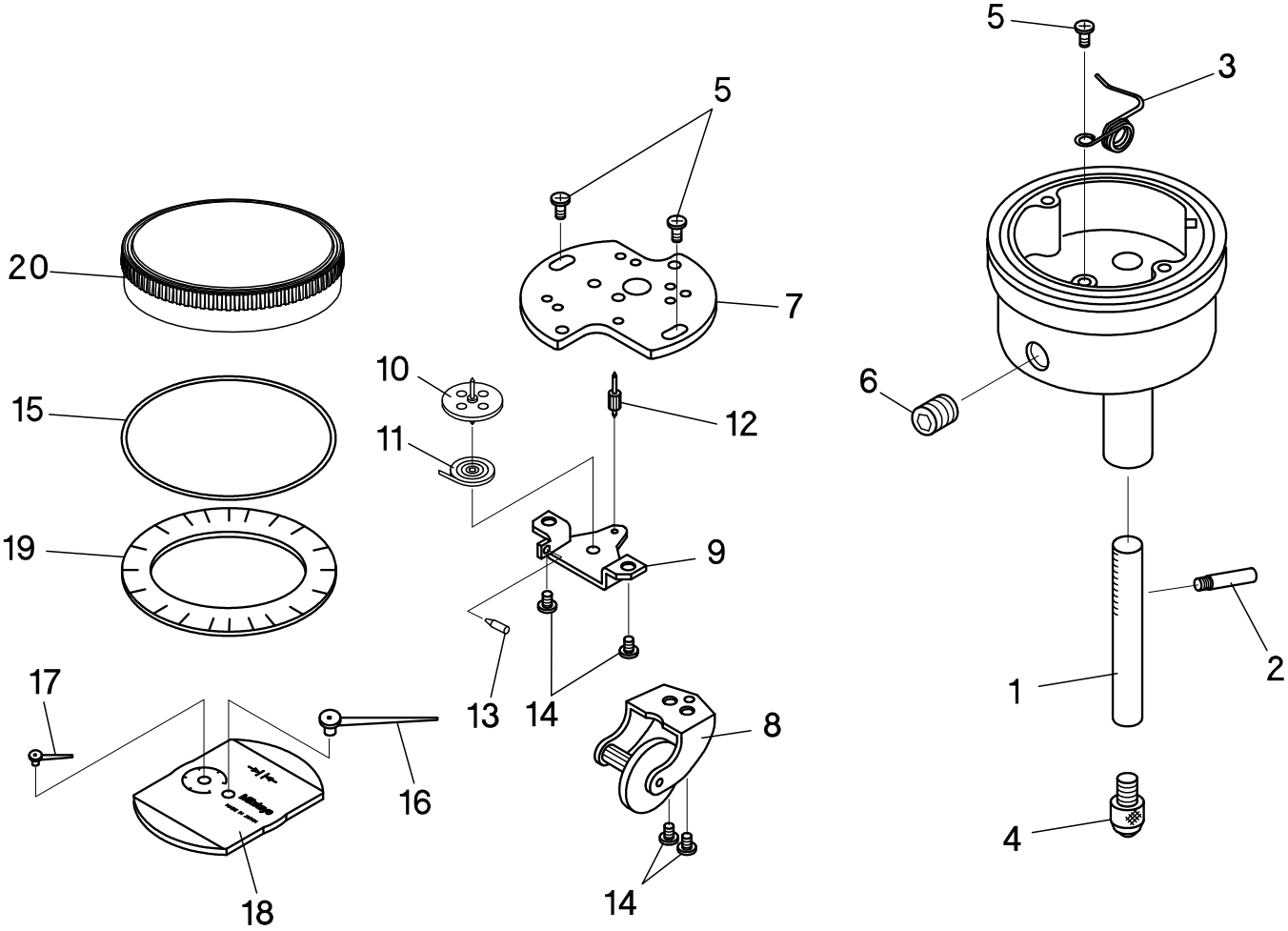

書類NO, 1-66

KEY NO,	ブヒンメイ	PART NAME	販売区分 CATEGORY	CODE NO, コードNO, 1160A –	1162A –	1166A –	1167A –	1168A –		備考 COMMENTS
1	ｽﾋﾟﾝﾄﾞﾙ	SPINDLE	Y	21BAA023		21BAA158				
2	ｶﾞｲﾄﾞﾋﾟﾝ	PIN, SPINDLE GUIDE		21BAA024						※1
3	ｽﾌﾟﾘﾝｸﾞ	SPRING		21BAA477						
4	ｿｸﾃｲｼ	POINT		21AZA319		21BZB056				
5	ｼﾞｭｳｼﾞﾅﾍﾞｺﾈｼﾞ(M2)	SCREW		101028						※1
6	ﾄﾒﾈｼﾞ	SCREW,SET		136730						
7	ｼﾞｲﾀ	PLATE, BOTTOM		21AZB491						※1
8	ｸﾗｳﾝｷﾞﾔ	GEAR,CROWN		21BZA022		21BZA168				
9	ｼﾞｸｳｹｲﾀ	PLATE, TOP		21AZB492						
10	ﾊﾞｯｸﾊｸﾞﾙﾏ	GEAR, TAKE-UP		21AZB494						
11	ﾋｹﾞｾﾞﾝﾏｲ	SPRING, HAIR		902104						
12	ｾﾝﾀｰﾋﾟﾆｵﾝ	PINION, CENTER		21AAB514						
13	ﾃｰﾊﾟﾋﾟﾝ	PIN, HAIR SPRING		101237						
14	ｼﾞｭｳｼﾞﾅﾍﾞｺﾈｼﾞ(M2)	SCREW		192719						
15	Oﾘﾝｸﾞ	O-RING, BEZEL SEAL		21CAB123						
16	ﾁｮｳｼﾝ	HAND, DIAL		21AZB478						※1
17	ﾀﾝｼﾝ	HAND, COUNTER		21AZB568						
18	ﾓｼﾞｲﾀ	COUNTER		21AAB599	21AAB600A	21BAB555A	21BAB555B	21BAB556A		
19	ﾒﾓﾘｲﾀ	DIAL		21AAB429	21FDG190	21AAB432	21AAB433	21BAB498		
20	ｿﾄﾜｸ	BEZEL		21CZB116						
	【包装資材】	【PACKING】								
	ｶｸﾉｳﾊﾞｺ	HOUSING CASE		21RZA046					ﾐﾗｺｰﾄ無し / No Label	
				※1 交換するには修理技術が必要です。交換後の精度は保証しません。						
				Repair technology is required in order to exchange.The accuracy after exchange is not guaranteed.						