Ref No,133-02A-2016-FEB

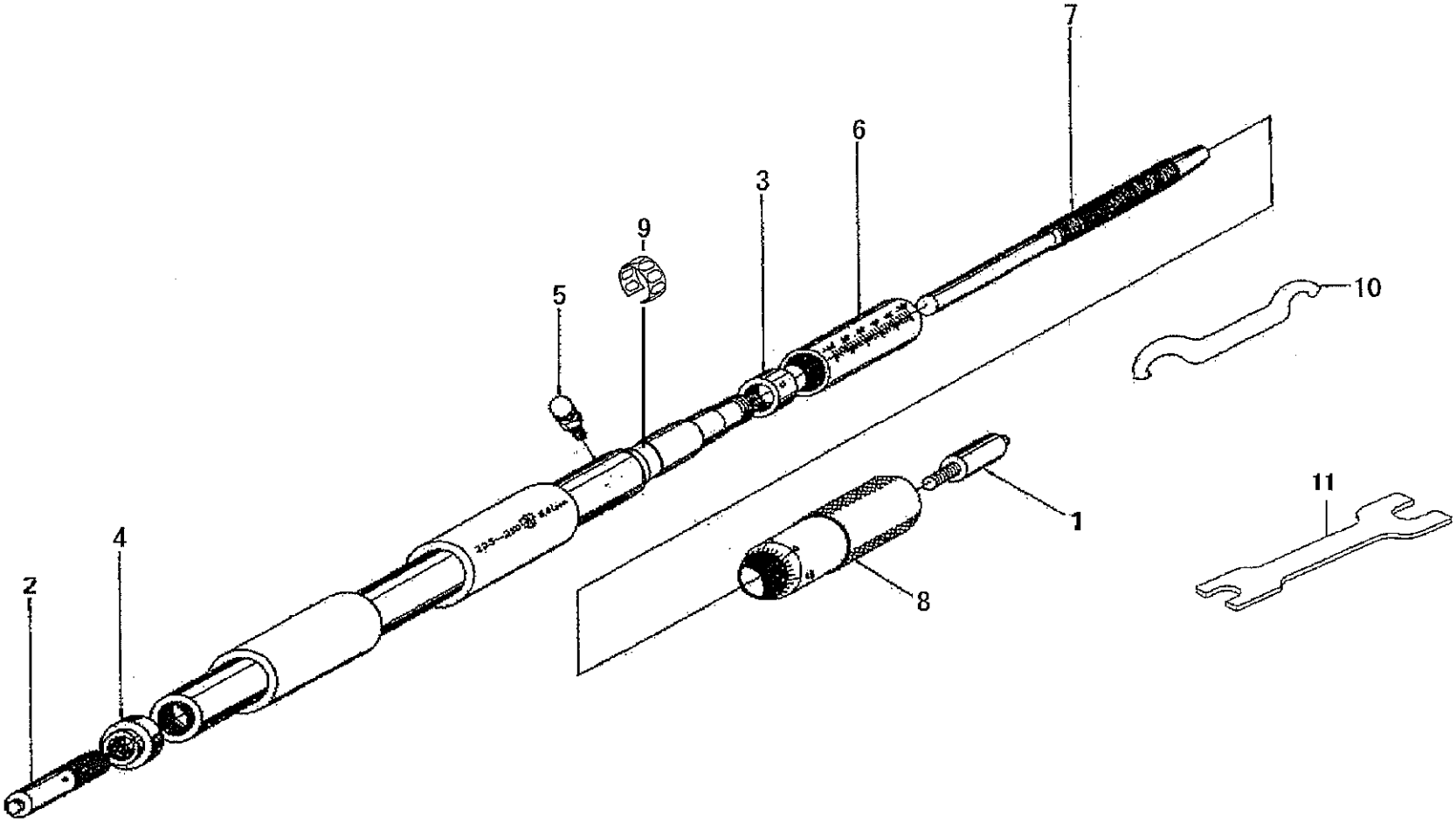

書類NO, 133-02

| KEY NO. | ブヒンメイ | PART NAME | 販売区分 CATEGORY | CODE NO. コードNO. | | | | | | 備考 COMMENTS |
|---|---|---|---|---|---|---|---|---|---|---|
| | | | | 133-147 IM-175 | 133-148 IM-200 | 133-149 IM-225 | 133-150 IM-250 | 133-151 IM-275 | 133-152 IM-300 | |
| | | | | 133-227 IM-7″ | 133-228 IM-8″ | 133-229 IM-9″ | 133-230 IM-10″ | 133-231 IM-11″ | 133-232 IM-12″ | |
| | | | | 133-153 IM-325 | 133-154 IM-350 | 133-155 IM-375 | 133-156 IM-400 | | | |
| 1 | ｱﾝﾋﾞﾙ | ANVIL | Y | 300455 | | | | | | |
| 2 | ﾁｮｳｾｲｱﾝﾋﾞﾙ | ANVIL,ADJ | Y | 04GAA152 | | | | | | |
| 3 | ﾃｰﾊﾟﾅｯﾄ | NUT,ADJ | Y | 200415 | | | | | | |
| 4 | ﾁｮｳｾｲﾅｯﾄ | LOCK NUT | | 04GAA153 | | | | | | |
| 5 | ｸﾗﾝﾌﾟﾈｼﾞ | CLAMP SCREW | | 04GZA357 | | | | | | |
| 6 | ｶﾞｲﾄｳ(ﾐﾘ) | SLEEVE(METRIC) | Y | 200220 | 200221 | 200222 | 200223 | 200224 | 200225 | 300mmﾏﾃﾞ Up to 300mm |
| | ｶﾞｲﾄｳ(ﾐﾘ) | SLEEVE(METRIC) | Y | 300093 | 300094 | 300095 | 300096 | --------- | | 400mmﾏﾃﾞ Up to 400mm |
| | ｶﾞｲﾄｳ(ｲﾝﾁ) | SLEEVE(ENGLISH) | Y | 200116 | | | | | | |
| 7 | ｽﾋﾟﾝﾄﾞﾙ(ﾐﾘ) | SPINDLE(METRIC) | Y | 300088 | | | | | | |
| | ｽﾋﾟﾝﾄﾞﾙ(ｲﾝﾁ) | SPINDLE(ENGLISH) | Y | 300321 | | | | | | |
| 8 | ｼﾝﾌﾞﾙ(ﾐﾘ) | THIMBLE(METRIC) | Y | 200124 | | | | | | |
| | ｼﾝﾌﾞﾙ(ｲﾝﾁ) | THIMBLE(ENGLISH) | Y | 200125 | | | | | | |
| 9 | ﾊﾞﾈﾘﾝｸﾞ | SPRING | Y | 305461 | | | | | | |
| 10 | ｽﾊﾟﾅ | SPANNER | | 301336 | | | | | | |
| 11 | ｽﾊﾟﾅ | SPANNER | | 04GAA274 | | | | | | 注記/Note |
| | ﾄﾘｱﾂｶｲｾﾂﾒｲｼｮ | USERS MANUAL | | 99MAA003M | | | | | | |
| | | | | KeyNo11: 互換性あり 2010年12月度生産分より変更 | | | | | | |
| | | | | KeyNo11:No. 04GAA274 is compatible with the old model. Will change at the production in December 2010. | | | | | | |

書類NO, 133-02

| KEY NO. | ブヒンメイ | PART NAME | 販売区分 CATEGORY | CODE NO. コードNO. | | | | | | 備考 COMMENTS |
|---|---|---|---|---|---|---|---|---|---|---|
| | | | | 133-147 IM-175 | 133-148 IM-200 | 133-149 IM-225 | 133-150 IM-250 | 133-151 IM-275 | 133-152 IM-300 | |
| | | | | 133-227 IM-7″ | 133-228 IM-8″ | 133-229 IM-9″ | 133-230 IM-10″ | 133-231 IM-11″ | 133-232 IM-12″ | |
| | | | | 133-153 IM-325 | 133-154 IM-350 | 133-155 IM-375 | 133-156 IM-400 | | | |
| | 【包装資材】 | 【PACKING】 | | | | | | | | |
| | ｶｸﾉｳﾊﾞｺ | HOUSING CASE | | 04MZA261 | 04MZA262 | 470004 | | 470005 | | 300mmﾏﾃﾞ Up to 300mm |
| | ｶｸﾉｳﾊﾞｺ | HOUSING CASE | | 04MAA084 | | 04MAA085 | | --------- | | 400mmﾏﾃﾞ Up to 400mm |
| | ｹｼｮｳｹｰｽ | PAPER CASE | | 471430 | | --------- | | | | 300mmﾏﾃﾞ Up to 300mm |
| | Bﾀﾞﾝｹｰｽ | CARDBOARD CASE | | --------- | | 04MAA366 | | 04MAA367 | | 300mmﾏﾃﾞ Up to 300mm |
| | Bﾀﾞﾝｹｰｽ | CARDBOARD CASE | | 04MAA373 | | 04MAA374 | | --------- | | 400mmﾏﾃﾞ Up to 400mm |
| | | | | 梱包資材 2006年7月度生産分より変更 互換性あり<br>The packing materials have been changed since July,2006,and are compatible with old models. | | | | | | |