Ref No,145-01-2014-JUN

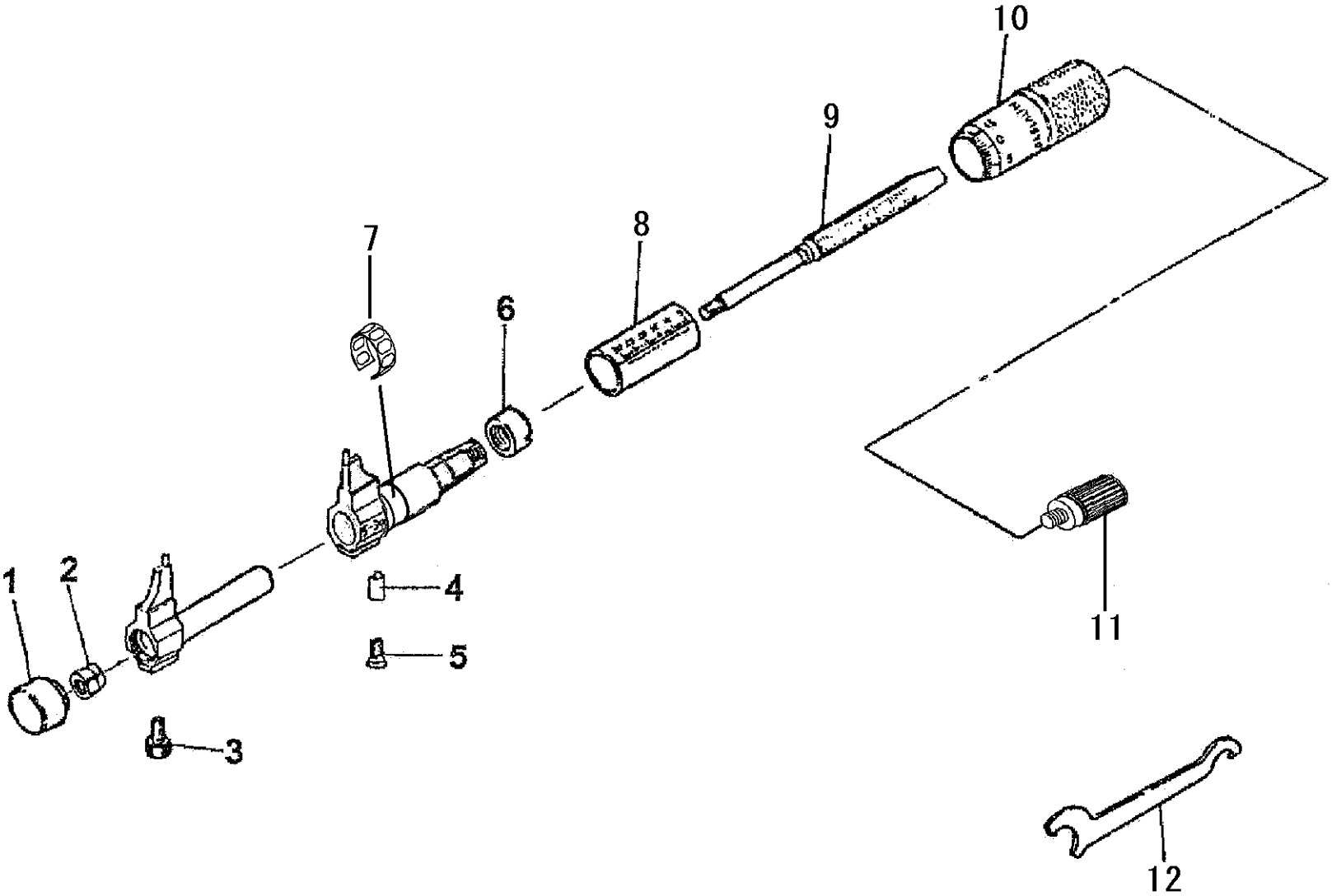

書類NO, 145-01

KEY NO.	ブヒンメイ	PART NAME	販売区分 CATEGORY	CODE NO. コードNO. 145-185 IMP-30	145-193 IMP-1.2″		備考 COMMENTS
1	ｷｬｯﾌﾟ	CAP		200109			
2	ｳｹｺﾞﾏ	SETTING PIECE	Y	303776			
3	ｸﾗﾝﾌﾟﾈｼﾞ	SCREW,CLAMP		303948			
4	ｷｰ	KEY	Y	303949			注記/Note
5	ﾄﾒﾈｼﾞ	SETSCREW		200108			
6	ﾃｰﾊﾟﾅｯﾄ	NUT,ADJ	Y	200415			
7	ﾊﾞﾈﾘﾝｸﾞ	SPRING	Y	305461			
8	ｶﾞｲﾄｳ	SLEEVE	Y	303946	303947		
9	ｽﾋﾟﾝﾄﾞﾙ	SPINDLE	Y	303944	303945		
10	ｼﾝﾌﾞﾙ	THIMBLE	Y	200381	200382		
11	ﾗﾁｪｯﾄ	RATCHET STOP		04GZA239			
12	ｽﾊﾟﾅ	SPANNER		301336			
	ﾄﾘｱﾂｶｲｾﾂﾒｲｼｮ	USERS MANUAL		99MAA002M			
	【包装資材】	【PACKING】					
	ｶｸﾉｳﾊﾞｺ	HOUSING CASE		475084			
	ｹｼｮｳｹｰｽ	PAPER CASE		471077			
				KeyNo4: 本体と現行合せが必要な為修理対応が望ましい KeyNo4: This part needs to be checked for its compatibility with a main unit when replaced. Therefore, it is recommended that a user should ask for our repair service.			