Ref No,145-02A-2014-JUN

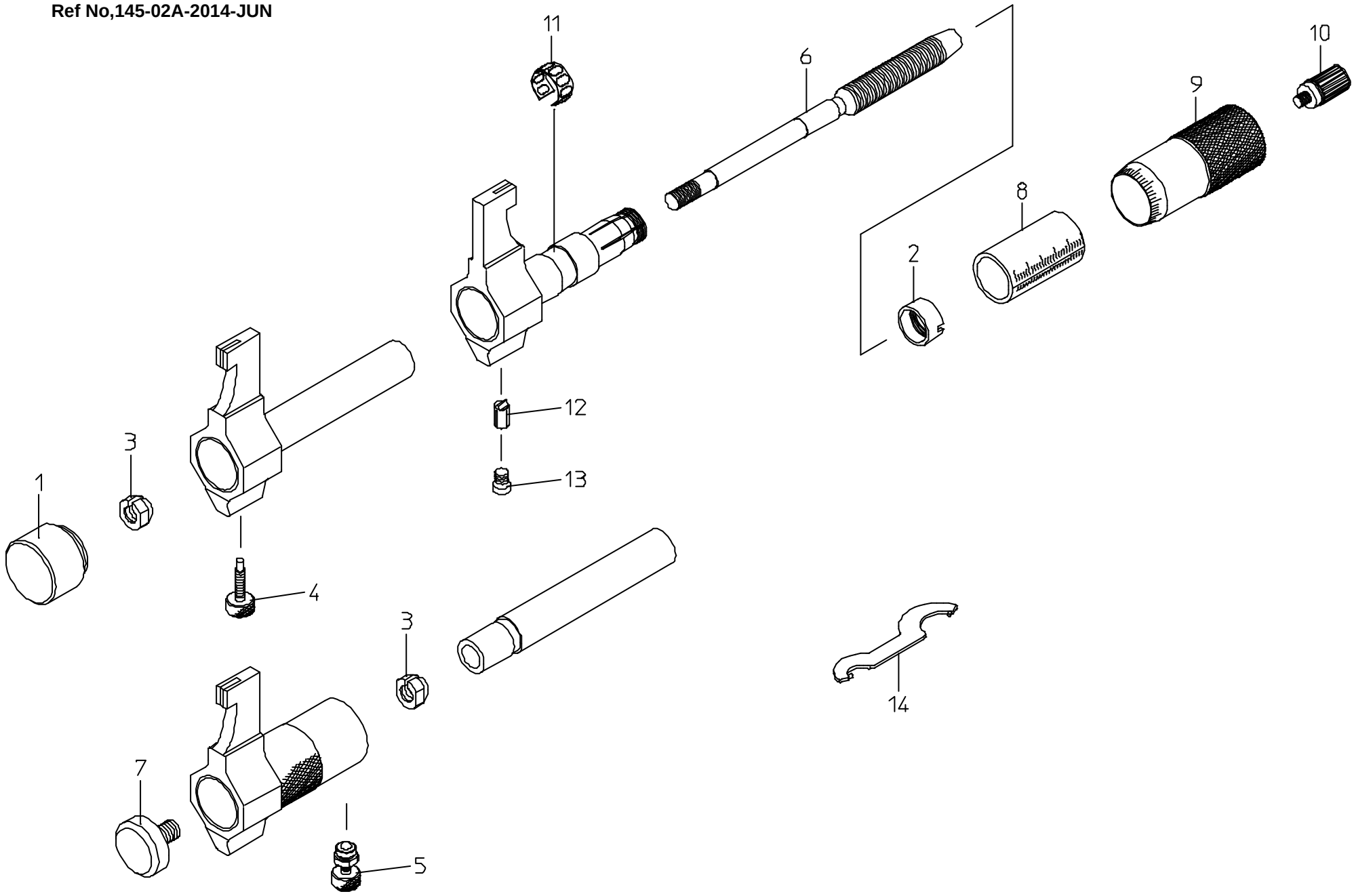

書類NO, 145-02

KEY NO.	ブヒンメイ	PART NAME	販売区分 CATEGORY	CODE NO. コードNO.						備考 COMMENTS
				145-186 IMP-50	145-187 IMP-75	145-188 IMP-100	145-189 IMP-125	145-190 IMP-150		
				145-194 IMP-2″	145-195 IMP-3″	145-196 IMP-4″	145-197 IMP-5″	145-198 IMP-6″		
1	ｷｬｯﾌﾟ	CAP		200109	------					
2	ﾃｰﾊﾟﾅｯﾄ	NUT,ADJ	Y	200415						
3	ｳｹｺﾞﾏ	NUT	Y	303776						
4	ｸﾗﾝﾌﾟﾈｼﾞ	SCREW,CLAMP		303948	------					
5	ｸﾗﾝﾌﾟﾈｼﾞ	SCREW,CLAMP		------	04GZA357					
6	ｽﾋﾟﾝﾄﾞﾙ(ﾐﾘ)	SPINDLE(METRIC)	Y	305434						
	ｽﾋﾟﾝﾄﾞﾙ(ｲﾝﾁ)	SPINDLE(ENGLISH)	Y	305435						
7	ﾄﾒﾈｼﾞ	SETSCREW		------	200062					
8	ｶﾞｲﾄｳ(ﾐﾘ)	SLEEVE(METRIC)	Y	200091	200092	200093	200094	200095		
	ｶﾞｲﾄｳ(ｲﾝﾁ)	SLEEVE(ENGLISH)	Y	200098						
9	ｼﾝﾌﾞﾙ(ﾐﾘ)	THIMBLE(METRIC)	Y	200381						
	ｼﾝﾌﾞﾙ(ｲﾝﾁ)	THIMBLE(ENGLISH)	Y	200382						
10	ﾗﾁｪｯﾄ	RATCHET STOP		04GZA239						
11	ﾊﾞﾈﾘﾝｸﾞ	SPRING	Y	305461						
12	ｷｰ	KEY	Y	303949						注記/Note
13	ﾄﾒﾈｼﾞ	SETSCREW		200108						
14	ｽﾊﾟﾅ	SPANNER		301336						
	ﾄﾘｱﾂｶｲｾﾂﾒｲｼｮ	USERS MANUAL		99MAA002M						
	【包装資材】	【PACKING】								
	ｶｸﾉｳﾊﾞｺ	HOUSING CASE		475084	475130		475160	475161		
	ｹｼｮｳｹｰｽ	PAPER CASE		471077	471430		471431	471432		
				KeyNo12: 本体と現行合せが必要な為修理対応が望ましい KeyNo12: This part needs to be checked for its compatibility with a main unit when replaced. Therefore, it is recommended that a user should ask for our repair service.						