Ref No,145-02A-2016-MAY

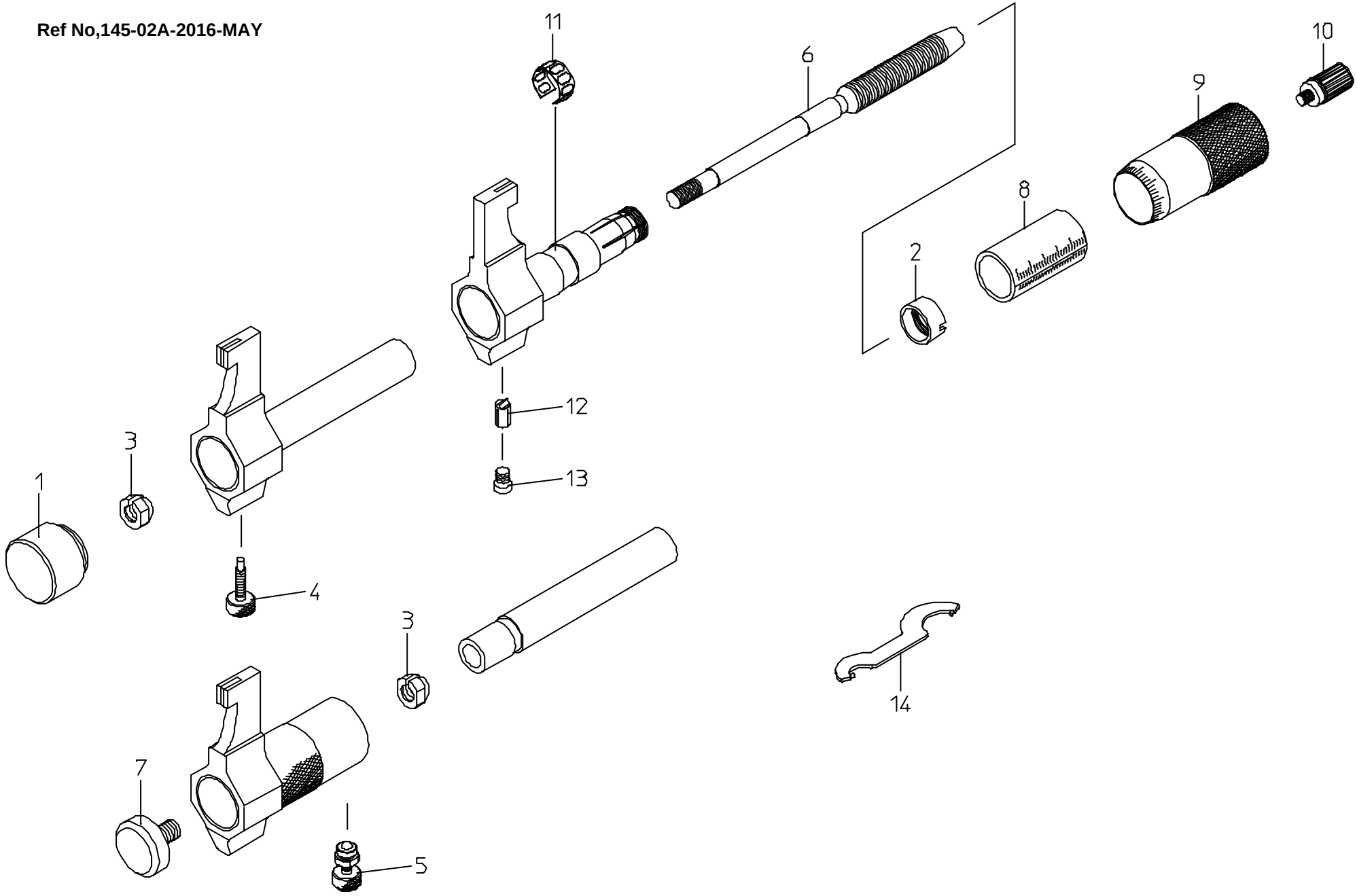

書類NO, 145-02

KEY NO.	ブヒンメイ	PART NAME	販売区分 CATEGORY	CODE NO. コードNO.						備考 COMMENTS
				145-186 IMP-50	145-187 IMP-75	145-188 IMP-100	145-189 IMP-125	145-190 IMP-150		
				145-194 IMP-2″	145-195 IMP-3″	145-196 IMP-4″				
1	ｷｬｯﾌﾟ	CAP		200109	-------					
2	ﾃｰﾊﾟﾅｯﾄ	NUT,ADJ	Y	200415						
3	ｳｹｺﾞﾏ	NUT	Y	303776						
4	ｸﾗﾝﾌﾟﾈｼﾞ	SCREW,CLAMP		303948	-------					
5	ｸﾗﾝﾌﾟﾈｼﾞ	SCREW,CLAMP		-------	04GZA357					
6	ｽﾋﾟﾝﾄﾞﾙ(ﾐﾘ)	SPINDLE(METRIC)	Y	305434						
	ｽﾋﾟﾝﾄﾞﾙ(ｲﾝﾁ)	SPINDLE(INCH)	Y	305435			-------			
7	ﾄﾒﾈｼﾞ	SETSCREW		-------	200062					
8	ｶﾞｲﾄｳ(ﾐﾘ)	SLEEVE(METRIC)	Y	200091	200092	200093	200094	200095		
	ｶﾞｲﾄｳ(ｲﾝﾁ)	SLEEVE(INCH)	Y	200098			-------			
9	ｼﾝﾌﾞﾙ(ﾐﾘ)	THIMBLE(METRIC)	Y	200381						
	ｼﾝﾌﾞﾙ(ｲﾝﾁ)	THIMBLE(INCH)	Y	200382			-------			
10	ﾗﾁｪｯﾄ	RATCHET STOP		04GZA239						
11	ﾊﾞﾈﾘﾝｸﾞ	SPRING	Y	305461						
12	ｷｰ	KEY	Y	303949						注記/Note
13	ﾄﾒﾈｼﾞ	SETSCREW		200108						
14	ｽﾊﾟﾅ	SPANNER		301336						
	ﾄﾘｱﾂｶｲｾﾂﾒｲｼｮ	USERS MANUAL		99MAA002M						
	【包装資材】	【PACKING】								
	ｶｸﾉｳﾊﾞｺ	HOUSING CASE		475001	475130	475131	475160	475161		注記/Note
	ｹｼｮｳｹｰｽ	PAPER CASE		471077	471430		471431	471432		

KeyNo12: 本体と現行合せが必要な為修理対応が望ましい
KeyNo12: This part needs to be checked for its compatibility with a main unit when replaced.
Therefore, it is recommended that a user should ask for our repair service.

ｶｸﾉｳﾊﾞｺ: 互換性あり 2016年4月度生産分より変更
HOUSING CASE: 475001 is compatible with the old model. Will change at the production in April 2016.

ｶｸﾉｳﾊﾞｺ(475131): 誤記訂正/Clerical error correction