Ref No,150-03A-2006-JAN

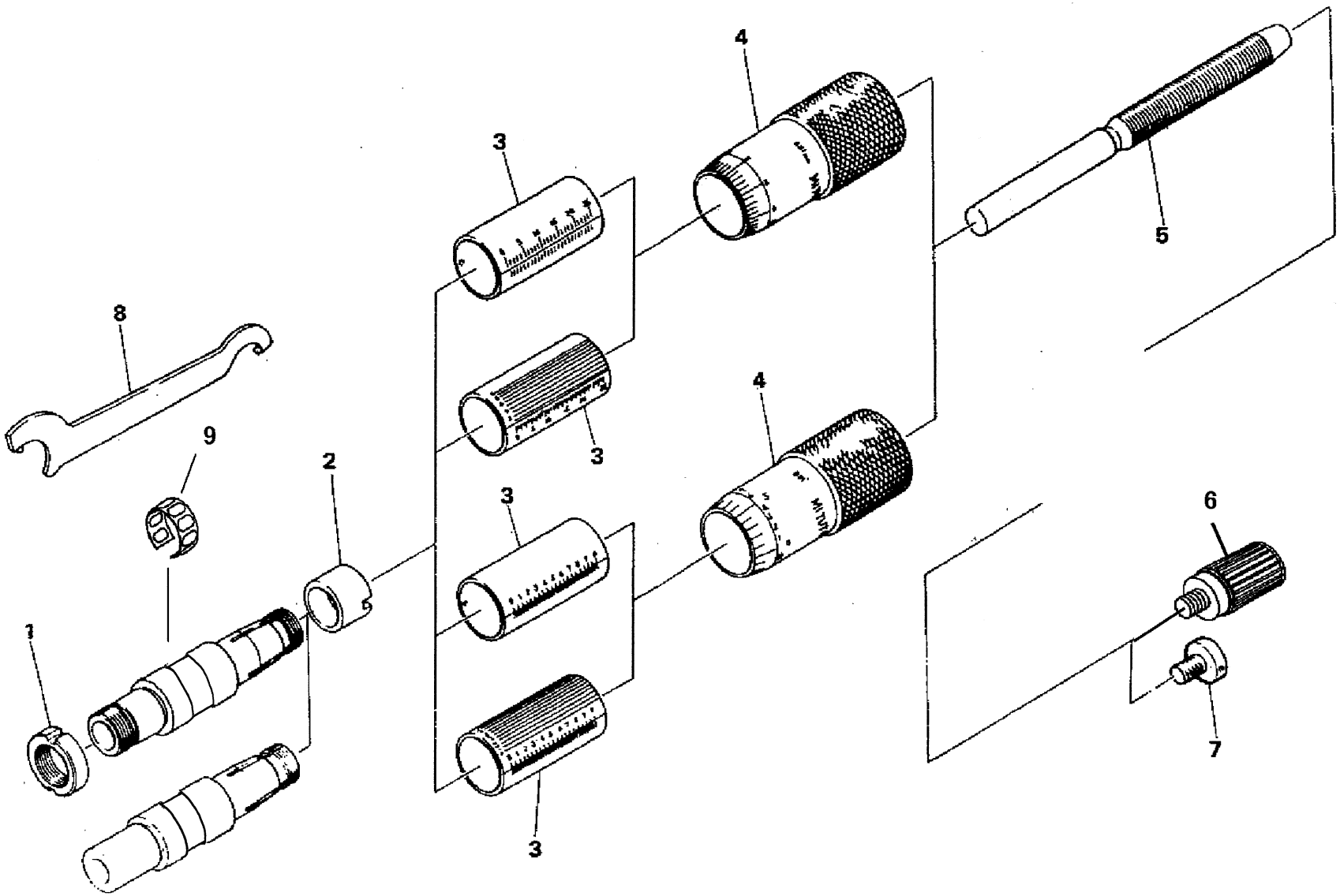

書類NO, 150-03

KEY NO.	ブヒンメイ	PART NAME	販売区分 CATEGORY	CODE NO. コードNO.						備考 COMMENTS
				150-192 MHN1-25	150-190 MHN1-25V	150-196 MHN1-25T	150-191 MHN2-25	150-189 MHN2-25V	150-195 MHN2-25T	
				150-208 MHN1-1"	150-206 MHN1-1"V	150-198 MHN1-1"T	150-207 MHN2-1"	150-205 MHN2-1"V	150-197 MHN2-1"T	
1	ｼﾒﾂｹﾅｯﾄ	CLAMP NUT		--------			200365			
2	ﾅｯﾄ	NUT	Y	200415						
3	ｶﾞｲﾄｳ (ﾐﾘ)	SLEEVE (MM)	Y	04GAA907A	04GAA909A	04GAA907E	04GAA907B	04GAA909B	04GAA907F	互換性ｱﾘ '05/3月
	ｶﾞｲﾄｳ (ｲﾝﾁ)	SLEEVE (INCH)	Y	04GAA908A	04GAA910A	04GAA908E	04GAA908B	04GAA910B	04GAA908F	度生産分より変更
4	ｼﾝﾌﾞﾙ (ﾐﾘ)	THIMBLE (MM)	Y	303171	200371	303171		200371	303171	
	ｼﾝﾌﾞﾙ (ｲﾝﾁ)	THIMBLE (INCH)	Y	200370	200372	200370		200372	200370	
5	ｽﾋﾟﾝﾄﾞﾙ (ﾐﾘ)	SPINDLE (MM)	Y	200127						
	ｽﾋﾟﾝﾄﾞﾙ (ｲﾝﾁ)	SPINDLE (INCH)	Y	200128						
6	ﾗﾁｪｯﾄ	RATCHET STOP		04GZA239		--------	04GZA239		--------	
7	ﾄﾒﾈｼﾞ	CLAMP SCREW		--------		200366	--------		200366	
8	ｽﾊﾟﾅ	SPANNER		301336						
9	ﾊﾞﾈﾘﾝｸﾞ	SPRING	Y	305461						
	【包装資材】	【PACKING】								
	ｶｸﾉｳﾊﾞｺ	HOUSING CASE		472040						