Ref No,160-02B-2009-JUN

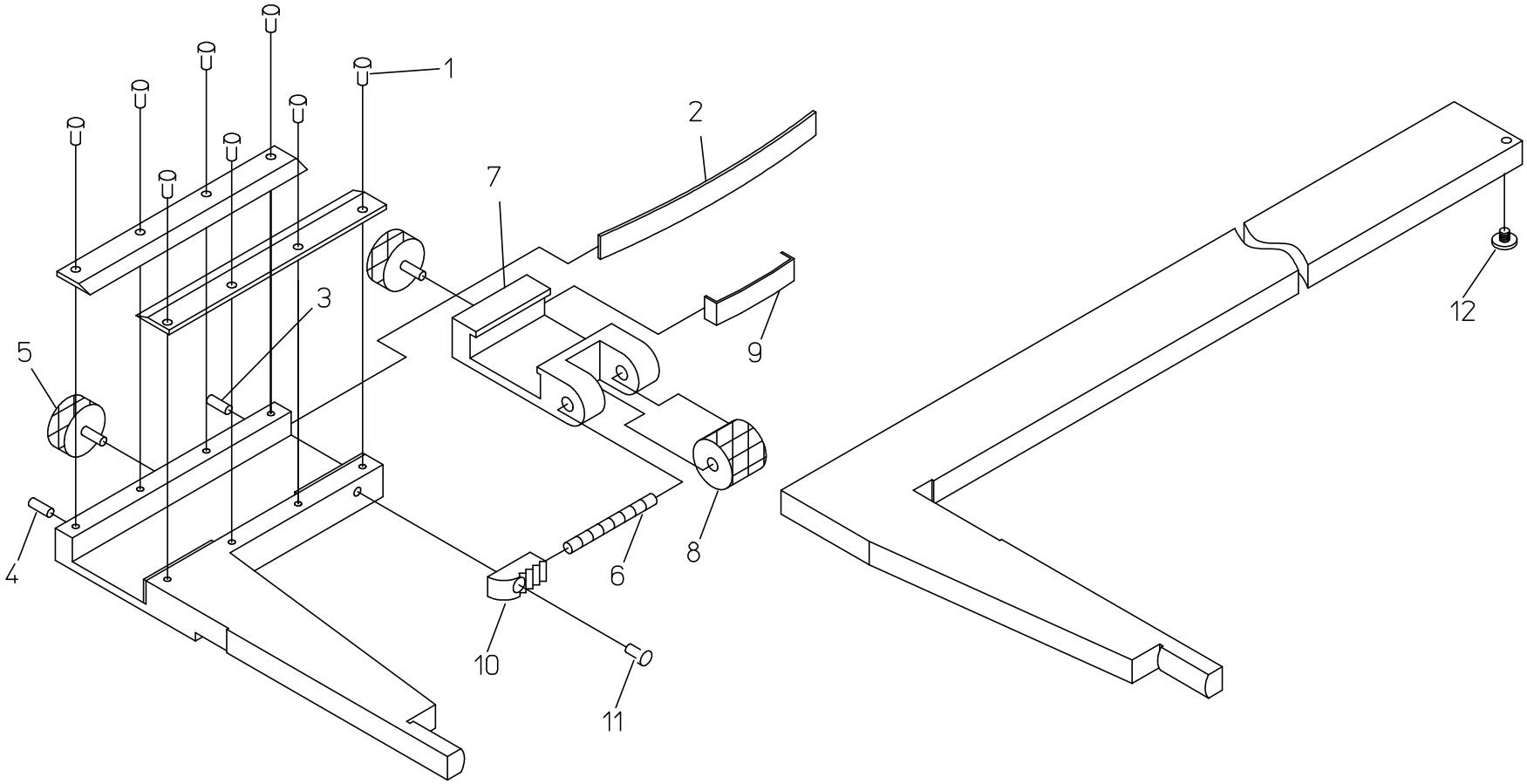

書類NO, 160-02

KEY NO,	ブヒンメイ	PART NAME	販売区分 CATEGORY	CODE NO, コードNO,						備考 COMMENTS
				160-132 C100	160-104 CM100	160-133 C150	160-110 CM150	160-113 CM200	160-134 C200	
					160-155 CM40″P		160-157 CM60″P	160-159 CM80″P		
					160-105 CM40″Y		160-112 CM60″J	160-144 CM80″Y		
					160-106 CM40″J			160-115 CM80″J		
1	ｼﾞｭｳｼﾞﾅﾍﾞｺﾈｼﾞ	SCREW, PLATE		124667						
2	ｲﾀﾊﾞﾈ	GIB, SLIDER		108056		140123		108065		
3	ｾｯﾄﾈｼﾞ	SCREW, GIB SETTING		134577				134578		
4	ｵｼﾈｼﾞ	SCREW, GIB PRESSING		134581				134582		
5	ｸﾗﾝﾌﾟﾈｼﾞ	CLAMP, SLIDER		134586				134587		
6	ｵｸﾘﾈｼﾞ	SCREW, FINE ADJ.		–	134598	–	134598	134597	–	
7	ｵｸﾘﾊﾞｺ	CARRIER		–	134592	–	134592	134593	–	
8	ｵｸﾘｸﾞﾙﾏ	NUT, FINE ADJ.		–	134603	–	134603	134604	–	
9	ｵｸﾘﾊﾞｺｲﾀﾊﾞﾈ	GIB, CARRIER		–	108063	–	108063	108072	–	
10	ﾕﾋﾞｶｹ	KNOB, SLIDER		110580	134606	110580	134606	134607		
11	ｼﾞｭｳｼﾞﾅﾍﾞｺﾈｼﾞ	SCREW, KNOB		121037						
12	ｽﾄｯﾌﾟﾈｼﾞ	SCREW, SLIDER STOP		–						