Ref No,500-73-2019-OCT

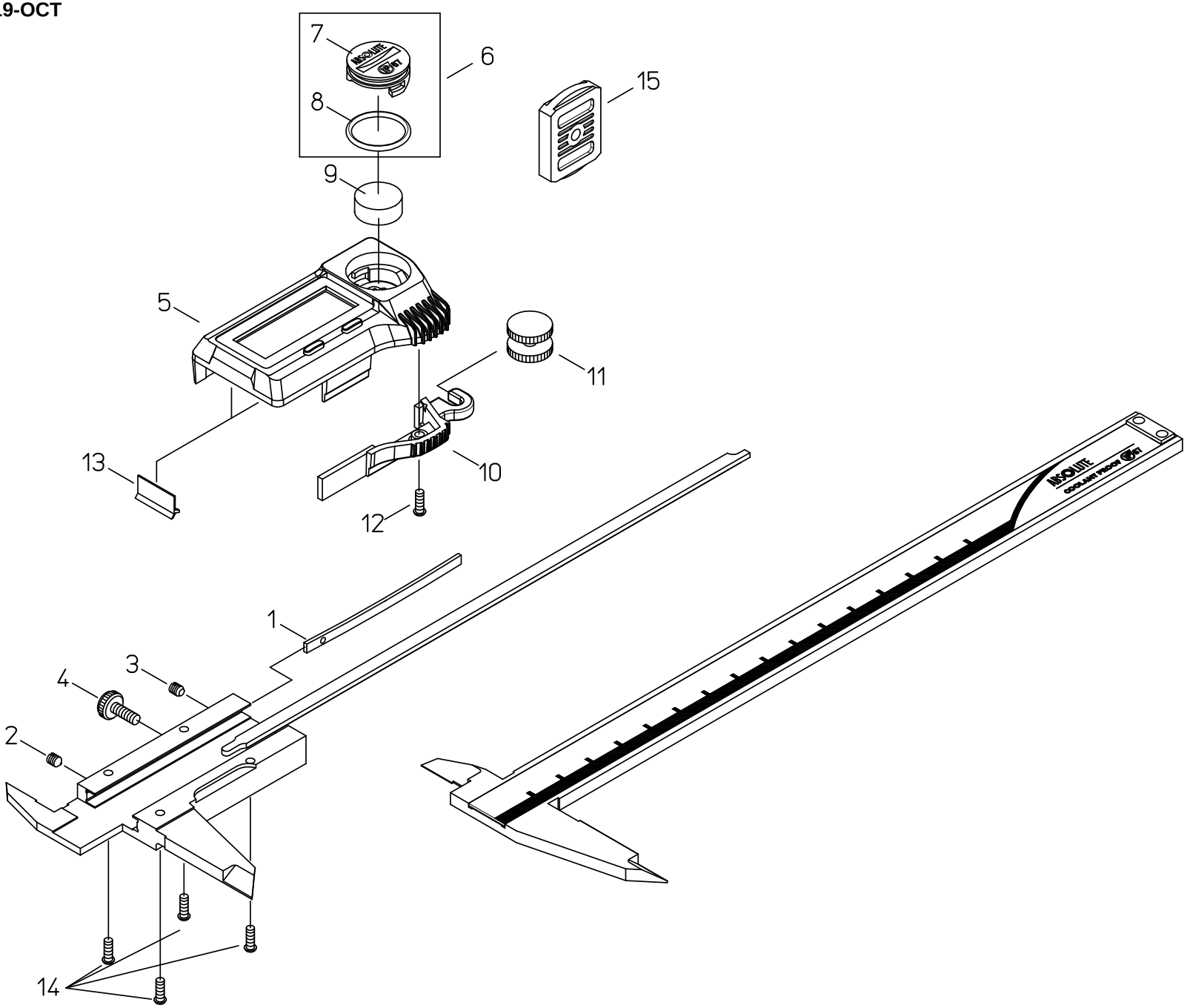

書類NO, 500-73

KEY NO,	ブヒンメイ	PART NAME	販売区分 CATEGORY	CODE NO. コードNO.						備考 COMMENTS
				500-702-20 CD-P15S	500-703-20 CD-P20S	500-752-20 CD-P6″S	500-768-20 CD-P6″SR	500-753-20 CD-P8″S	500-734-20 CD-P8″SWW	
						500-731-20 CD-P6″SW	500-733-20 CD-P6″SWW	500-732-20 CD-P8″SW		
1	ｲﾀﾊﾞﾈ	GIB, SLIDER		06ACA200						
2	ﾈｼﾞ､ｾｯﾄﾈｼﾞ	SCREW, GIB SETTING		05CAB037						
3	ﾈｼﾞ､ｵｼﾈｼﾞ	SCREW, GIB PRESSING		05CAB036						
4	ﾈｼﾞ､ｸﾗﾝﾌﾟ	CLAMP, SLIDER		541985						
5	ﾋｮｳｼﾞﾓｼﾞｭｰﾙASSY	READING UNIT ASSY	Y	06AGG560A		06AGG560B				
6	ﾃﾞﾝﾁﾌﾞﾀASSY	COVER CELL ASSY		06AEY285						
7	ﾃﾞﾝﾁﾌﾞﾀ	COVER CELL		06AEY286						
8	ﾃﾞﾝﾁﾌﾞﾀﾊﾟｯｷﾝ	PACKING, COVER CELL		06AEY287						
9	ﾎﾞﾀﾝﾃﾞﾝﾁ	BATTERY		938882						
10	ﾛｰﾗ､ｱｰﾑ	HOOK, ROLLER		06AEY270						
11	ﾛｰﾗ	ROLLER		141771						
12	ﾈｼﾞ､ｼﾞｭｳｼﾞﾅﾍﾞｺ(ﾖﾋﾞ2X5.8)	SCREW, HOOK ROLLER		546666						
13	ﾜｲﾊﾟｰ	WIPER	Y	198551						
14	ﾈｼﾞ､ｼﾞｭｳｼﾞﾅﾍﾞｺ(ﾖﾋﾞ2X10.5)	SCREW, READING UNIT ASSY	Y	05CAA926						
15	ﾃﾞﾝﾁﾌﾞﾀｷｰ	KEY, COVER CELL		06AEY282						
	【梱包資材】	【PACKING】								
	ｹｰｽ､PPｹｰｽ	PP CASE		05RAB235	05RAB350	05RAB235		05RAB350		
	ｹｰｽ､ｶﾗｰ(1ｺ)	COLOR CASE		06AFF185	06AFF186	06AFF185		06AFF186		