Ref No,506-02-2005-OCT

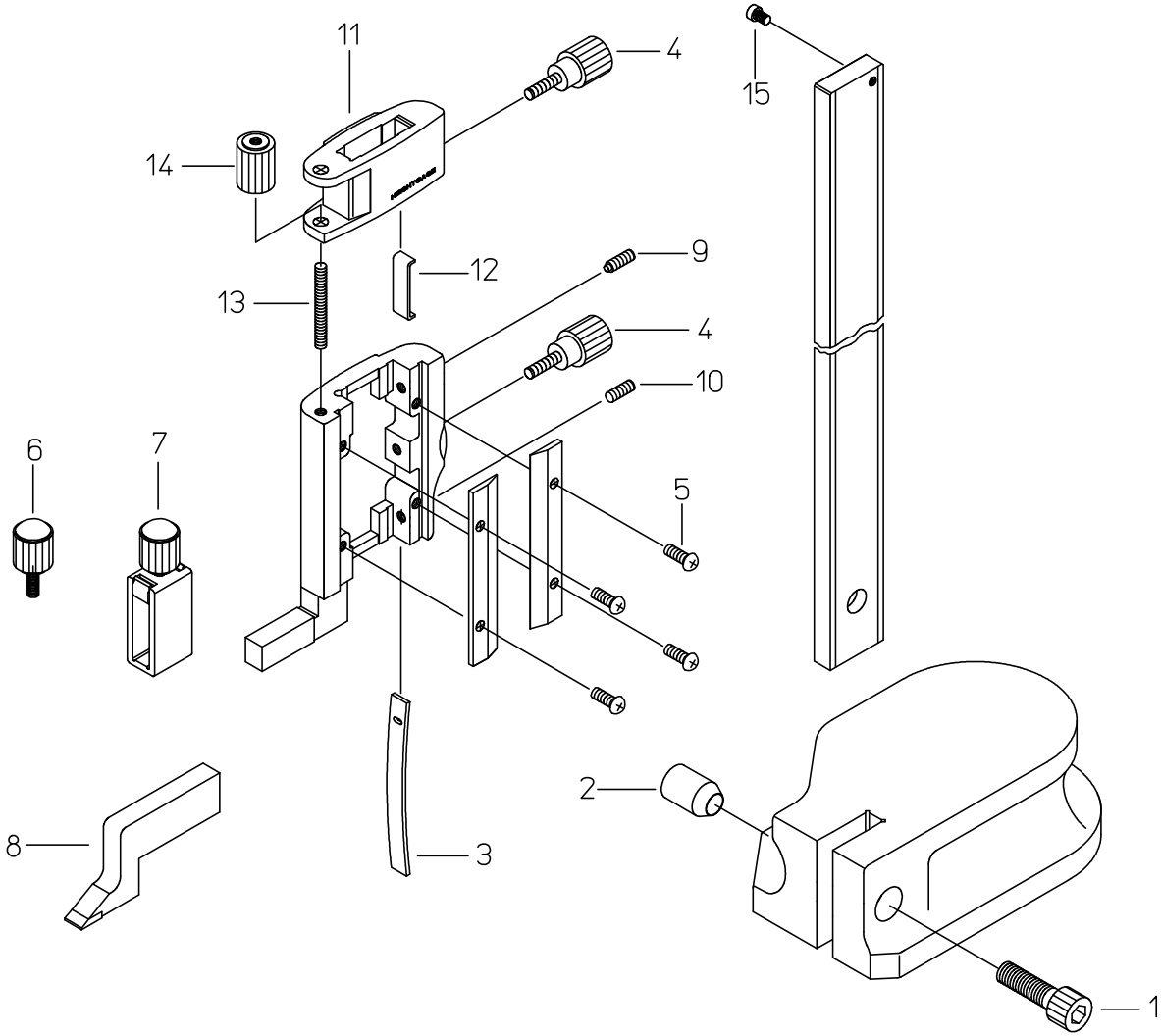

書類NO, 506-02

KEY NO,	ブヒンメイ	PART NAME	販売区分 CATEGORY	CODE NO, コードNO, 506-207 H4-20	506-208 H4-8"					備考 COMMENTS
1	ﾛｯｶｸｱﾅﾂｷﾎﾞﾙﾄ	SCREW, BASE		07GAA010						
2	ﾃｰﾊﾟﾅｯﾄ	TAPER NUT,BASE		101620						
3	ｲﾀﾊﾞﾈ	GIB SLIDER		07GAA013						
4	ｸﾗﾝﾌﾟﾈｼﾞ	CLAMP,SLIDER		07GAA016						
5	ｼﾞｭｳｼﾞﾅﾍﾞｺﾈｼﾞ	SCREW,PLATE		07GAA012						
6	ｸﾗﾝﾌﾟﾈｼﾞ	SCREW,HOLDER SCRIBER		07GAA022						
7	ｽｸﾗｲﾊﾞｸﾗﾝﾌﾟ	HOLDER,SCRIBER		07GZA004						
8	ｽｸﾗｲﾊﾞ	SCRIBER		900173						
9	ｾｯﾄﾈｼﾞ	SCREW,GIB SETTING		110077						
10	ｵｼﾈｼﾞ	SCREW,GIB PRESSING		101654						
11	ｵｸﾘﾊﾞｺ	CARRIER		07GAA019						
12	ｵｸﾘﾊﾞｺｲﾀﾊﾞﾈ	GIB,CARRIER		07GAA020						
13	ｵｸﾘﾈｼﾞ	SCREW,FINE ADJ		07GAA021						
14	ｵｸﾘｸﾞﾙﾏ	NUT,FINE ADJ		121784						
15	ｽﾄｯﾌﾟﾈｼﾞ	SCREW,SLIDER STOP		05AAA015						