Ref No,513-53-2018-SEP

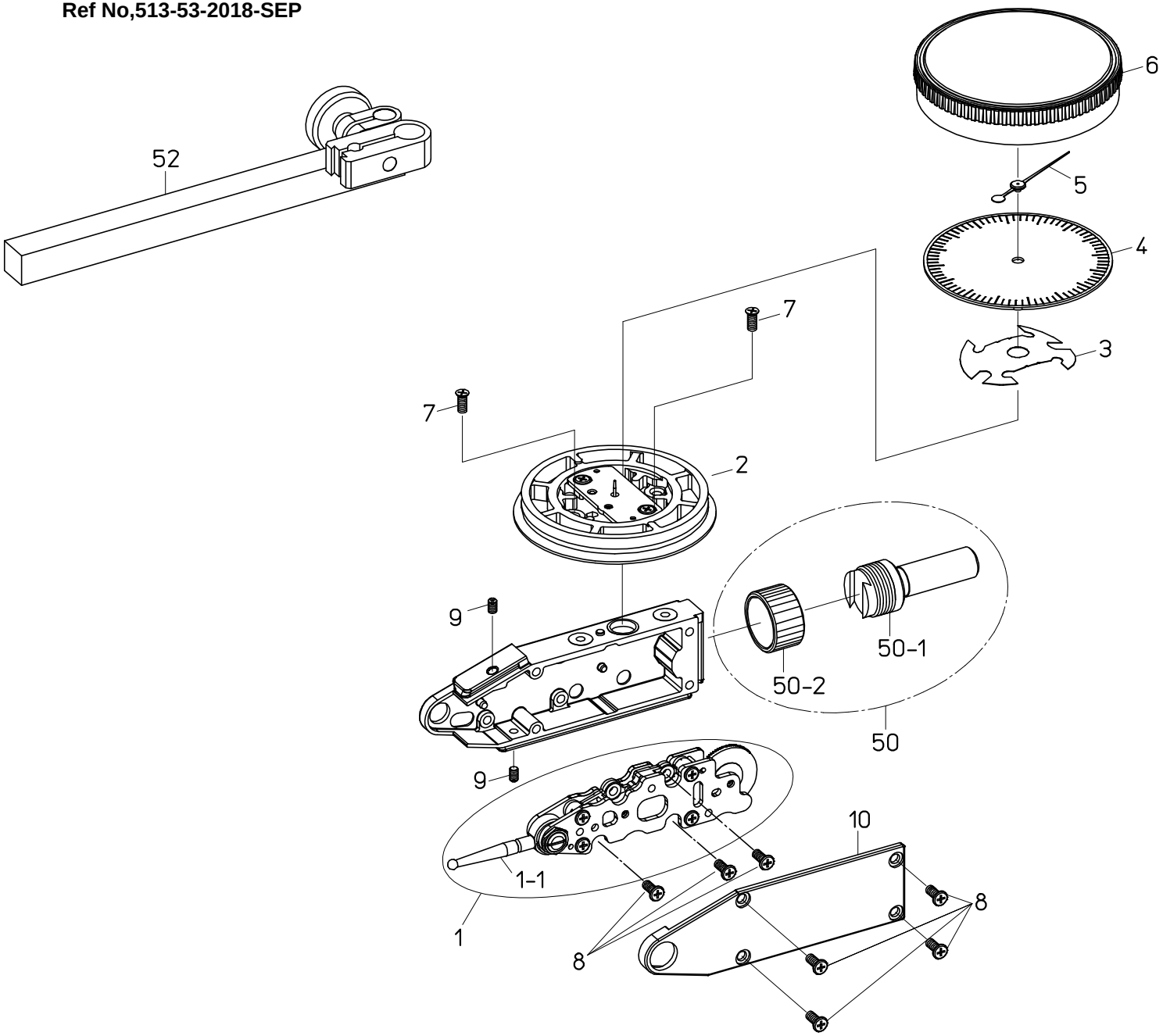

書類NO, 513-53

KEY NO,	ブヒンメイ	PART NAME	販売区分 CATEGORY	CODE NO, コードNO, 513-424-10 TI-133X	513-478-10 TI-133RX	513-415-10 TI-123X	513-477-10 TI-123RX	513-401-10 TI-111X	513-471-10 TI-111RX	備考 COMMENTS
1	ﾑｰﾌﾞﾒﾝﾄ	MOVEMENT		21CZB036	21CZB037	21CZB073	21CZB074	21CZB051	21CZB052	※1
1-1	φ2ﾎﾟｲﾝﾄ	POINT,φ2		137557	21CZA210	136013	21CZA211	103010	21CZA209	
2	ｼﾞｸｳｹﾎﾙﾀﾞ ASSY	PLATE BASE ASSY		21CZB019						※1
3	ｲﾀﾊﾞﾈ	WASHER SPRING		21CAA024						※1
4	ﾒﾓﾘｲﾀ	DIAL		21CAB057A	21CAB057D	21CAB075A	21CAB075D	21CAB049A	21CAB049D	※1
5	ﾁｮｳｼﾝ	HAND, DIAL		21CZB035						※1
6	ｿﾄﾜｸ	BEZEL		21CZB115						
7	M1.7X4 ｻﾗｺﾈｼﾞ	SCREW M1.7X4		21CAA056						
8	M1.7X3.8 ﾅﾍﾞｺﾈｼﾞ	SCREW M1.7X3.8		21CAB009						
9	M1.6X2.7 ｾｯﾄﾈｼﾞ	SCREW SET		21CAB028						
10	ｶﾊﾞｰ	COVER		21CAB025						
	【標準付属品】	【STANDARD ACCESSORIES】								
1-1	φ1ﾎﾟｲﾝﾄ	POINT,φ1		137558	-	136235	-			A,Tｾｯﾄ
1-1	φ3ﾎﾟｲﾝﾄ	POINT,φ3		137559	-	136236	-			A,Tｾｯﾄ
50	φ4ｽﾃﾑASSY	STEM φ4 ASSY		21CZB131				-		A,Tｾｯﾄ
50-1	φ4ｽﾃﾑ	STEM φ4		21CAB106				-		A,Tｾｯﾄ
50-2	ｽﾃﾑﾅｯﾄ	NUT STEM		190322				-		A,Tｾｯﾄ
50	φ6ｽﾃﾑASSY	STEM φ6 ASSY		21CZB128						Hｾｯﾄ
50-1	φ6ｽﾃﾑ	STEM φ6		21CAB103						Hｾｯﾄ
50-2	ｽﾃﾑﾅｯﾄ	NUT STEM		190322						Hｾｯﾄ
50	φ8ｽﾃﾑASSY	STEM φ8 ASSY		21CZB129						E,A,Tｾｯﾄ
50-1	φ8ｽﾃﾑ	STEM φ8		21CAB104						E,A,Tｾｯﾄ
50-2	ｽﾃﾑﾅｯﾄ	NUT STEM		190322						E,A,Tｾｯﾄ
52	ﾌﾞﾗｹｯﾄ	BRACKET		901158				-		Tｾｯﾄ
	【包装資材】	【PACKING】								
	ｹｰｽ	CASE		21RAD096						
	ｶﾗｰｹｰｽ	PAPER CASE		21RAD117						

※1 交換するには修理技術が必要です。交換後の精度は保証しません。
Repair technology is required in order to exchange.The accuracy after exchange is not guaranteed.

Key No,5 リーマー加工品
Reamer processed goods