**Ref No,514-04-2011-MAY**

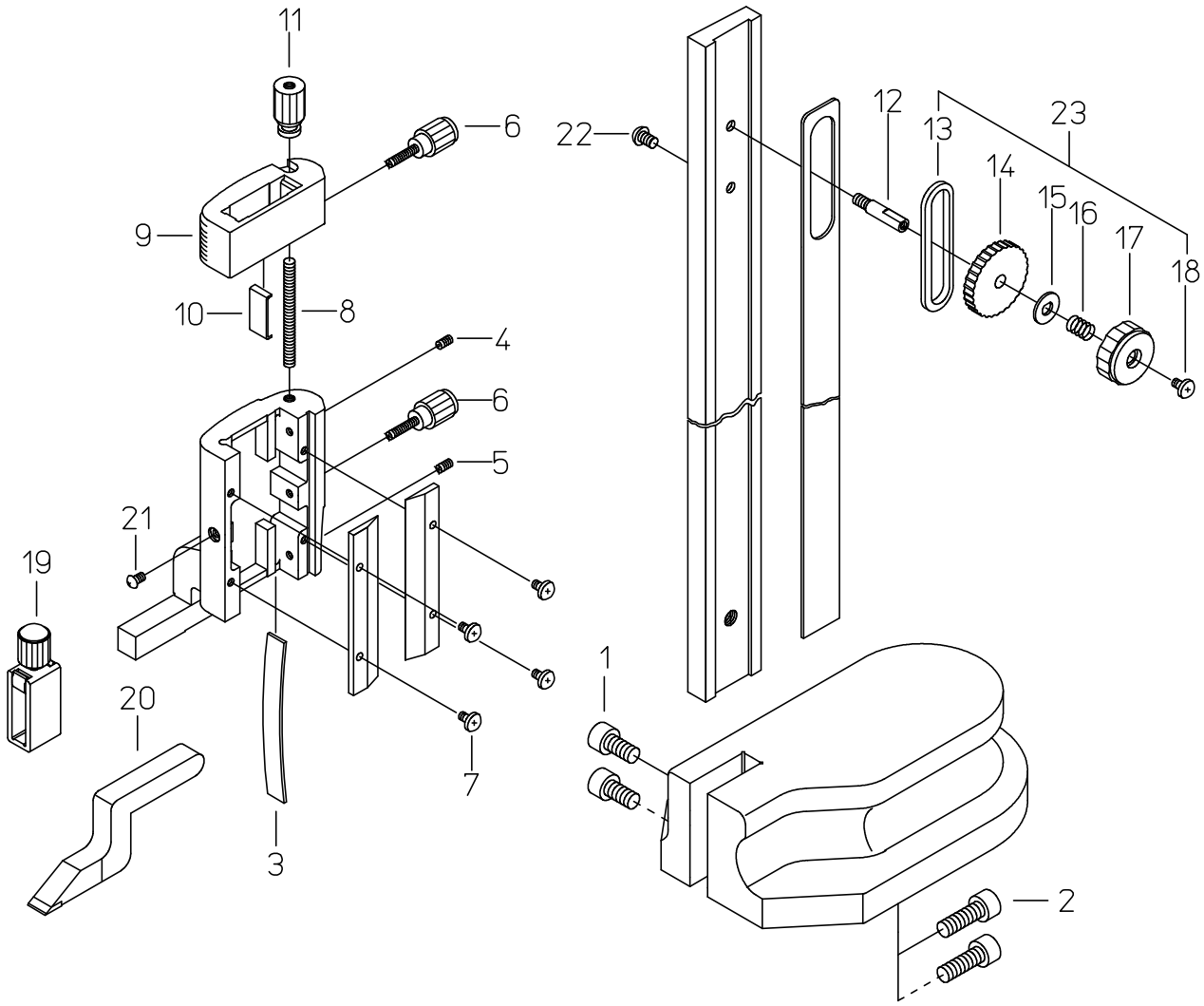

書類NO, 514-04

| KEY NO, | ブヒンメイ | PART NAME | 販売区分 CATEGORY | CODE NO, コードNO, 514-102 HS-30 / 514-103 HS-12″ | 514-104 HS-45 / 514-105 HS-18″ | 514-106 HS-60 / 514-107 HS-24″ | | 備考 COMMENTS |
|---|---|---|---|---|---|---|---|---|
| 1 | ﾛｯｶｸｱﾅﾂｷﾎﾞﾙﾄ | SCREW, BASE | Y | 07GAA028 | | 07GAA076 | | |
| 2 | ﾛｯｶｸｱﾅﾂｷﾎﾞﾙﾄ | SCREW, BASE | Y | 05GAA051 | | 142006 | | |
| 3 | ｲﾀﾊﾞﾈ | GIB, SLIDER | | 110076 | | 111820 | | |
| 4 | ｾｯﾄﾈｼﾞ | SCREW, GIB SETTING | | 110077 | | | | |
| 5 | ｵｼﾈｼﾞ | SCREW, GIB PRESSING | | 101654 | | | | |
| 6 | ｸﾗﾝﾌﾟﾈｼﾞ | CLAMP, SLIDER | | 05HAA125 | | 05HAA206 | | |
| 7 | ｼﾞｭｳｼﾞﾅﾍﾞｺﾈｼﾞ | SCREW, PLATE | | 07GAA012 | | | | |
| 8 | ｵｸﾘﾈｼﾞ | SCREW, FINE ADJ. | | 134598 | | 134597 | | |
| 9 | ｵｸﾘﾊﾞｺ | CARRIER | | 07GAA034 | | 07GAA015 | | |
| 10 | ｵｸﾘﾊﾞｺｲﾀﾊﾞﾈ | GIB, CARRIER | | 07GAA035 | | 07GAA052 | | |
| 11 | ｵｸﾘｸﾞﾙﾏ | NUT, FINE ADJ. | | 07GAA038 | | 07GAA006 | | |
| 12 | ｼｬﾌﾄ | SHAFT | | 145890 | | 880158 | | |
| 13 | ﾗｯｸ | RACK, BLADE FINE ADJ. | | 145889 | | | | |
| 14 | ﾋﾟﾄﾞｳﾊｸﾞﾙﾏ | PINION. BLADE FINE ADJ. | | 145891 | | | | |
| 15 | ﾜｯｼｬ | WASHER | | 145894 | | | | |
| 16 | ｽﾌﾟﾘﾝｸﾞ | SPRING | | 145895 | | | | |
| 17 | ﾅｯﾄ | NUT, BLADE CLAMP | | 07GAA040 | | | | |
| 18 | ｼﾞｭｳｼﾞﾄﾗｽﾈｼﾞ | SCREW, STOPPER | | 07GAA041 | | | | |
| 19 | ｽｸﾗｲﾊﾞｸﾗﾝﾌﾟ | CLAMP, SCRIBER | | 05GZA033 | | | | |
| 20 | ｽｸﾗｲﾊﾞ | SCRIBER | | 07GZA000 | | | | |
| 21 | ｼﾞｭｳｼﾞﾅﾍﾞｺﾈｼﾞ | SCREW | | 124667 | | | | |
| 22 | ｼﾞｭｳｼﾞﾅﾍﾞｺﾈｼﾞ | SCREW, STOPPER SLIDER | | 07GAA087 | | | | |
| 23 | ﾎﾝｼﾞｬｸｲﾄﾞｳﾌﾞ ｷｯﾄ | KIT NO (BLADE FINE ADJ) | | 05GZA006 | | | | |
| | | | | | | | | |
| | | | | | | | | |
| | | | | | | | | |
| | | | | | | | | |
| | | | | | | | | |
| | | | | | | | | |
| | | | | | | | | |