Ref No,573-77-2016-AUG

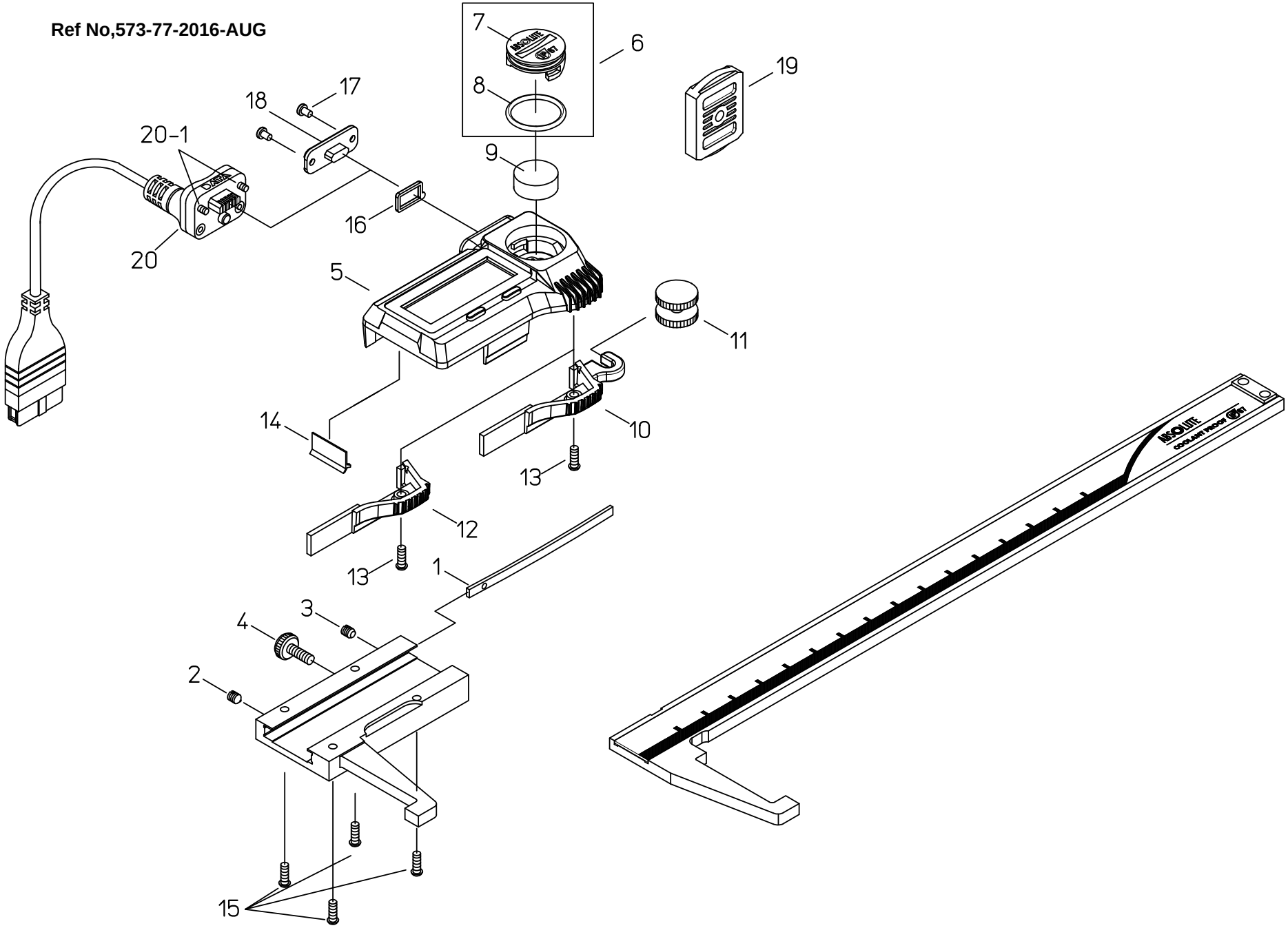

書類NO, 573-77

KEY NO,	ブヒンメイ	PART NAME	販売区分 CATEGORY	CODE NO. コードNO. 573-651-20 NTD15-P15M	573-653-20 NTD15-P15K	573-751-20 NTD15-P6″M		備考 COMMENTS
1	ｲﾀﾊﾞﾈ	GIB, SLIDER		06ACA200				
2	ﾈｼﾞ､ｾｯﾄﾈｼﾞ	SCREW, GIB SETTING		05CAB037				
3	ﾈｼﾞ､ｵｼﾈｼﾞ	SCREW, GIB PRESSING		05CAB036				
4	ﾈｼﾞ､ｸﾗﾝﾌﾟ	CLAMP, SLIDER		541985				
5	ﾋｮｳｼﾞﾓｼﾞｭｰﾙASSY	READING UNIT ASSY	Y	06AEY271A		06AEY271B		
6	ﾃﾞﾝﾁﾌﾞﾀASSY	COVER CELL ASSY		06AEY285				
7	ﾃﾞﾝﾁﾌﾞﾀ	COVER CELL		06AEY286				
8	ﾃﾞﾝﾁﾌﾞﾀﾊﾟｯｷﾝ	PACKING, COVER CELL		06AEY287				
9	ﾎﾞﾀﾝﾃﾞﾝﾁ	BATTERY		938882				
10	ﾛｰﾗ､ｱｰﾑ	HOOK, ROLLER		06AEY270	-	06AEY270		
11	ﾛｰﾗ	ROLLER		141771	-	141771		
12	ﾕﾋﾞｶｹ	KNOB, SLIDER		-	06AEY273	-		
13	ﾈｼﾞ､ｼﾞｭｳｼﾞﾅﾍﾞｺ(ﾖﾋﾞ2×5.8)	SCREW, HOOK ROLLER		05CAA893				
14	ﾜｲﾊﾟｰ	WIPER	Y	198551				
15	ﾈｼﾞ､ｼﾞｭｳｼﾞﾅﾍﾞｺ(ﾖﾋﾞ2×10.5)	SCREW, READING UNIT ASSY	Y	05CAA926				
16	ｺﾈｸﾀﾊﾟｯｷﾝ	PACKING, CONNECTOR		09GAA374				
17	ﾈｼﾞ､ｼﾞｭｳｼﾞﾅﾍﾞｺ(M1.7×2.5)	SCREW, CAP CONNECTOR		09GAA376				
18	ｺﾈｸﾀｷｬｯﾌﾟ	CAP CONNECTOR		09GAA372				
19	ﾃﾞﾝﾁﾌﾞﾀｷｰ	KEY, COVER CELL		06AEY282				
	【ｵﾌﾟｼｮﾝ】	【OPTION】						
20	ｾﾂｿﾞｸｹｰﾌﾞﾙ(1M)	CONNECTING CABLE(1M)		05CZA624				
	ｾﾂｿﾞｸｹｰﾌﾞﾙ(2M)	CONNECTING CABLE(2M)		05CZA625				
20-1	ﾈｼﾞ､ｼﾞｭｳｼﾞﾅﾍﾞｺ(M1.7×6.5)	SCREW, CONNECTING CABLE		05CAA958				
	【梱包資材】	【PACKING】						
	ｹｰｽ､PPｹｰｽ	PP CASE		05RAB350				
	ｹｰｽ､ｶﾗｰ(1ｺ)	COLOR CASE		06AFF186				